WT-SYS-250-1

MATERIAL. - -

FINISH. - -

COLOR.

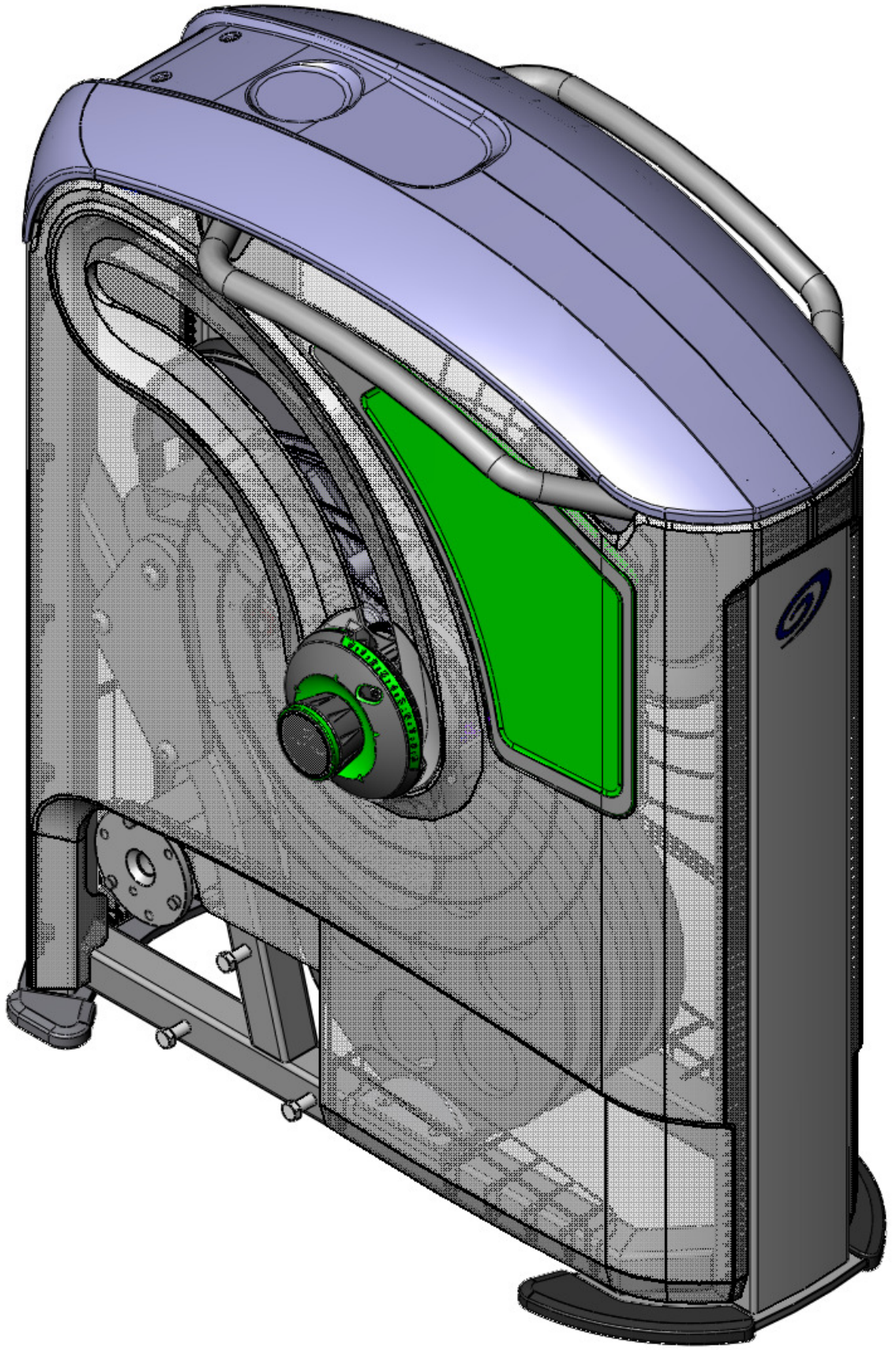

REVISIONS				
ECO	REVISION	REV DESCRIPTION	APPROVED	DATE
071607-G	A	Initial Release	GMW	7/16/2007
081407-A	B	Replace rear shield bolt with shorter one.	GMW	8/14/2007
--	C	Updated Part Numbers	GMW	11/1/2007
062708-A	D	Updated Part Numbers	GMW	7/2/2008

ITEM NO.	PART NUMBER	QTY.	DESCRIPTION
1	ENGINE-WT-250-1	1	ENGINE WEIGHT 250 LB 1 LB INCR
2	60-1202	1	S6 Tower Backframe
3	62-1211	1	HANDLEBAR TOWER
4	KNOB-LB-250-1	1	Weight Select Knob Assy
5	01-0011	3	½ -13 UNC x 3 Bolt
6	09-5030	1	FOOTPAD MOLDED BLACK
7	01-4070	4	BUTTON HEAD SOCKET CAP SCREW, 5/8 -11 x 1" BRIGHT ZINC
8	09-1273	1	Stop Weight Lower Engine "ONE"
9	56-0143	1	Mount Plate Inside Engine "ONE"
10	56-0144	1	Mount Plate Outside Engine "ONE"
11	56-0096	1	Mount Tower Display Marketing
12	03-4035	1	1/4-20 INSERT 11/16" LONG
13	02-9220	2	3/8 -16 UNC x 1¼ Bolt
14	01-1550	2	3/8 -16 UNC x 3 Bolt
15	02-3056	4	SCW-FHSCS 0313-18x0.625 G8-Zc
16	02-3054	2	SCW-FHSCS 0250-20x0.625 G8-Zc
17	03-1035	4	3/8" Lock Nut
18	03-2020	2	1/4" Lock Nut
19	09-4092	1	BUMPER
20	09-1272	1	Stop Weight Upper Engine "ONE"
21	12-5620	1	NLS Logo 3" Decal (001-4009)
22	12-5625	1	Engine Cover Decal "ONE"
23	12-1380	1	MADE IN USA
24	19-1291	1	SERIAL NO. DECAL
25	12-5626	1	NLS ONE Back Dome
26	12-5621	1	NLS ONE 3" Dome Decal (000-6491)
27	03-1055	2	1/2" Lock Nut
28	04-5207	1	WASHER, FLAT, ½" SAE
29	01-4054	2	BUTTON HEAD SOCKET CAP SCREW,½ -13 x 1½" BRIGHT ZINC
30	07-4005	1	Elson PF1008
31	01-4053	1	BUTTON HEAD SOCKET CAP SCREW,½ -13 x 1" BRIGHT ZINC
32	67-1200	1	Weight Drive Tower Positive Cam
33	56-0035	2	CLAMP BELT 1 1/4"
34	56-0217	2	Clamp Belt ONE
35	24-6045 (49.5")	1	Component Belt Weight Engine "ONE" - 49.5"
36	01-4035	4	¼ -20 UNC x 1¼ Wiz Lock Bolt
37	09-1213	2	Footpad Rubber Tower Front "ONE"
38	09-1214	2	Footpad Rubber Tower Rear "ONE"
39	01-4050	1	BUTTON HEAD SOCKET CAP SCREW ¼ -20 x ¾" BRIGHT ZINC
40	01-4060	2	BUTTON HEAD SOCKET CAP SCREW,¼ -20 x 3/8" BRIGHT ZINC
41	KIT-TOWR-SHIELD	1	SHIELD KIT FOR S6 WEIGHT SYS

NAUTILUS, INC.
16400 SE NAUTILUS DRIVE, VANCOUVER, WA 98683

UNLESS OTHERWISE SPECIFIED:
1. ALL DIMENSIONS APPLY BEFORE PLATING OR COATING.
2. REMOVE ALL BURRS, BREAK SHARP EDGES .020 IN MAX.
3. ALL MACHINED SURFACES Ra 125 uin.
4. ALL APPLICABLE NAUTILUS STANDARDS AND SPECIFICATIONS APPLY.

INCH

THIRD ANGLE PROJECTION

TOLERANCES.		
	X.	± .125
	X.X	± .020
	X.XX	± .010
	X.XXX	± .005
	X/X	± 1/64
	ANGULAR	± 1°

(INTERPRET DIMENSIONS AND TOLERANCES PER ASME Y14.5M - 1994)

DESIGNED	G.WEBB
DRAWN	G.Webb
DATE	09/07/07

DO NOT SCALE DRAWING

TITLE. Tower Weight Engine "ONE" 250-1

SIZE E | PART NO. WT-SYS-250-1 | REV. D

SCALE: 1:2 | SHEET 1 OF 7

This document is the property of Nautilus, Inc. It may not be reproduced in whole or part, provided to third parties, or used for any purposes other than the performance of work for Nautilus, Inc. without written authorization. All rights are reserved, including copyrights.

INCH_E_REV.B

WT-SYS-250-1

MATERIAL. - -

FINISH. - -

REVISIONS				
ZONE	REV.	DESCRIPTION	DATE	APPROVED
-	-	See Weight Tower BOM	-	-

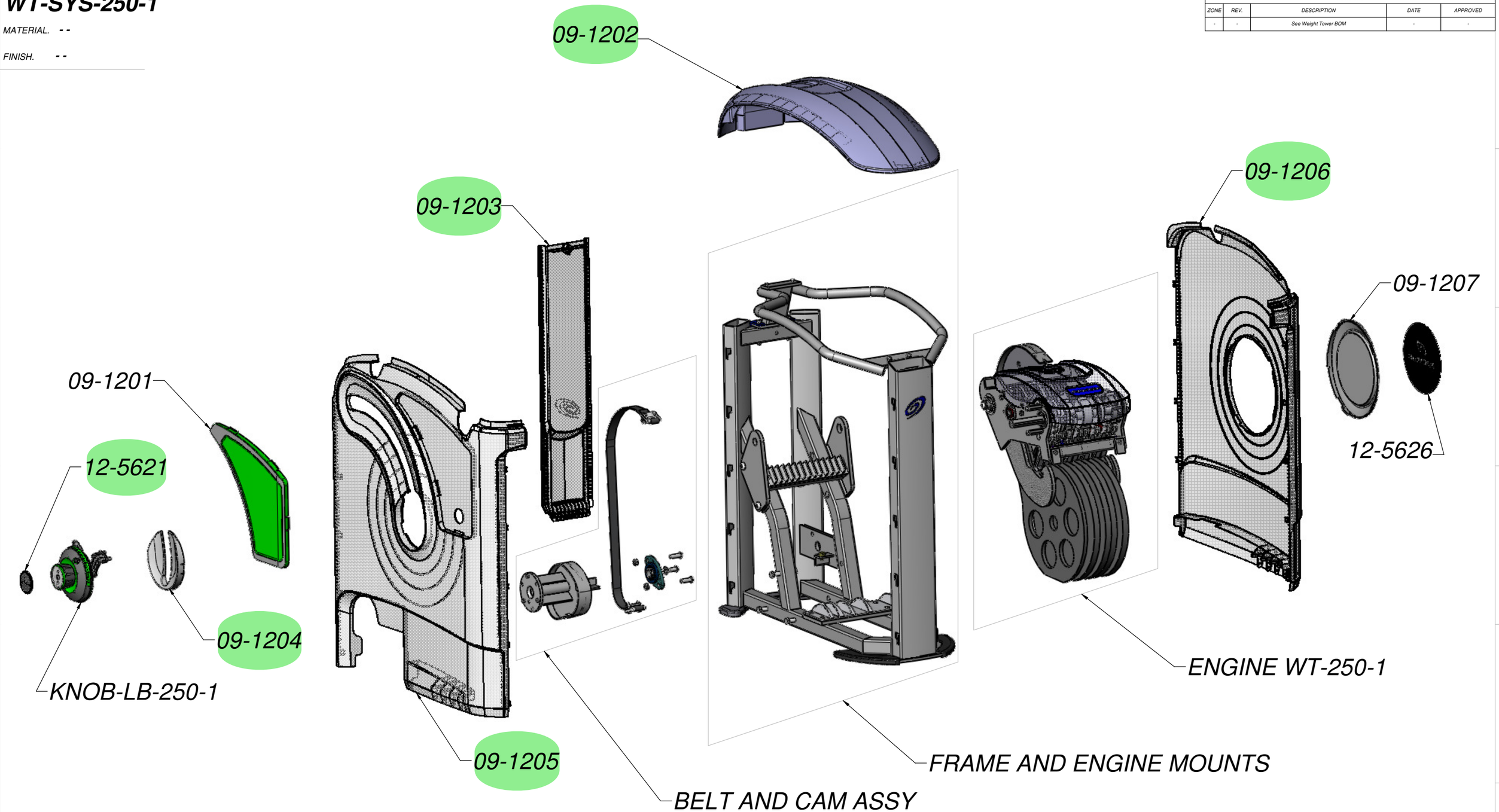

NAUTILUS, INC.
16400 SE NAUTILUS DRIVE, VANCOUVER, WA 98683
CONTACT email / phone #

UNLESS OTHERWISE SPECIFIED:
1. ALL DIMENSIONS APPLY BEFORE PLATING OR COATING.
2. REMOVE ALL BURRS, BREAK SHARP EDGES 0.5 MM MAX.
3. ALL MACHINED SURFACES Ra 3.2 uM.
4. ALL APPLICABLE NAUTILUS STANDARDS AND SPECIFICATIONS APPLY.

METRIC — THIRD ANGLE PROJECTION

TOLERANCES. X. ± 3; X.X ± 0.5; X.XX ± 0.25; X.XXX ± 0.1; ANGULAR ± 1°
(INTERPRET DIMENSIONS AND TOLERANCES PER ASME Y14.5M - 1994)

DESIGNED	G.WEBB
DRAWN	G.Webb
DATE	09/07/07

DO NOT SCALE DRAWING

TITLE Tower Weight Engine "ONE" 250-1

SIZE D | PART NO. WT-SYS-250-1 | REV. D

This document is the property of Nautilus, Inc. It may not be reproduced in whole or part, provided to third parties, or used for any purposes other than the performance of work for Nautilus, Inc. without written authorization. All rights are reserved, including copyrights.

SCALE: 1:6 SHEET 2 OF 7

WT-SYS-250-1

MATERIAL: - -

FINISH: - -

REVISIONS				
ZONE	REV.	DESCRIPTION	DATE	APPROVED
-	-	See Weight Tower BOM	-	-

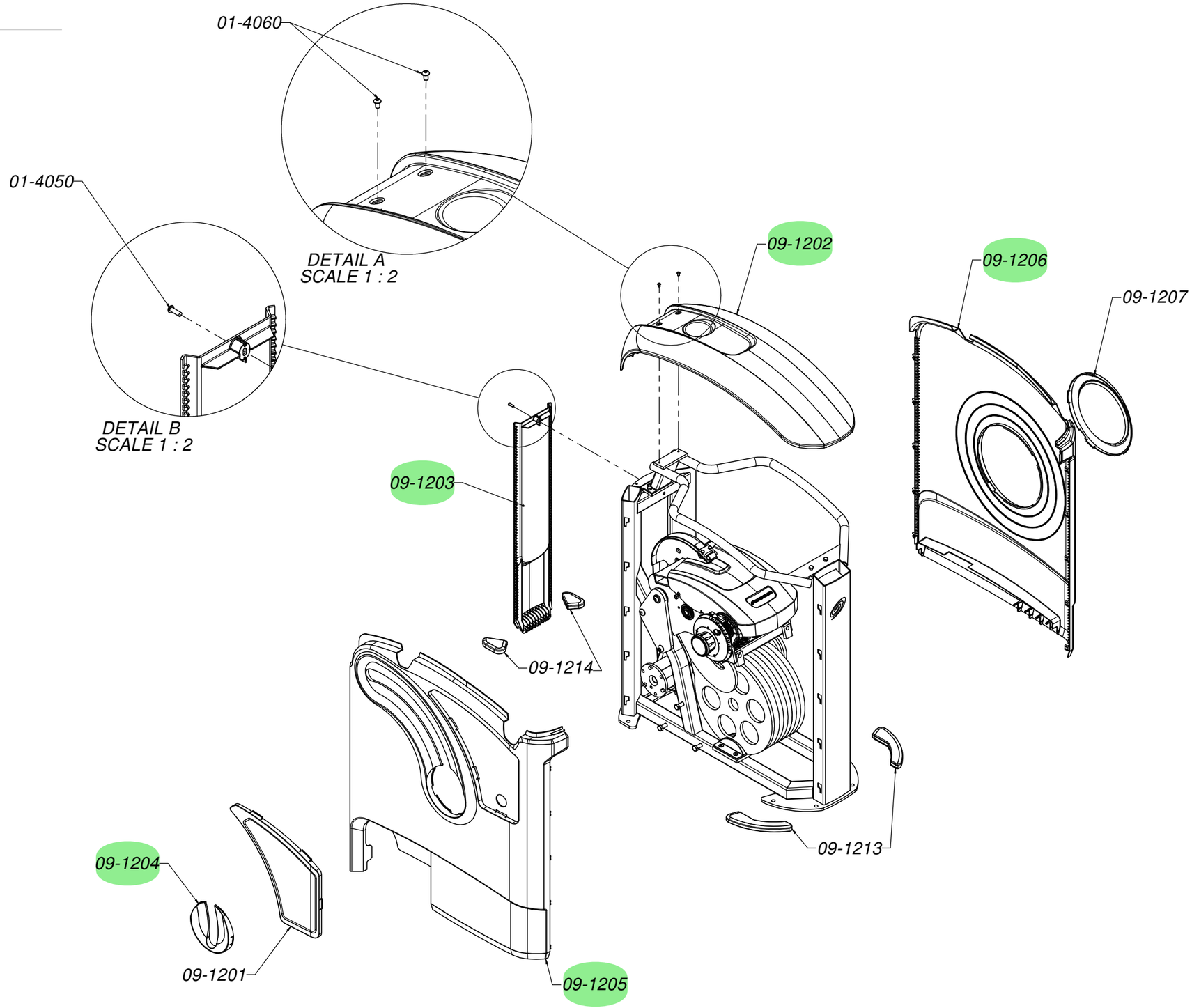

NAUTILUS, INC.
16400 SE NAUTILUS DRIVE, VANCOUVER, WA 98683

CONTACT email / phone #

UNLESS OTHERWISE SPECIFIED:
1. ALL DIMENSIONS APPLY BEFORE PLATING OR COATING.
2. REMOVE ALL BURRS, BREAK SHARP EDGES 0.5 MM MAX.
3. ALL MACHINED SURFACES Ra 3.2 uM
3. ALL APPLICABLE NAUTILUS STANDARDS AND SPECIFICATIONS APPLY

METRIC

THIRD ANGLE PROJECTION

TOLERANCES:

X	± 3
X.X	± 0.5
X.XX	± 0.25
X.XXX	± 0.1
ANGULAR	± 1 °

(INTERPRET DIMENSIONS AND TOLERANCES PER ASME Y14.5M - 1994)

DESIGNED	G.WEBB
DRAWN	G.Webb
DATE	09/07/07

DO NOT SCALE DRAWING

TITLE Tower Weight Engine "ONE" 250-1

SIZE E | PART NO. WT-SYS-250-1 | REV. D

SCALE: 1:5 | SHEET 3 OF 7

This document is the property of Nautilus, Inc. It may not be reproduced in whole or part, provided to third parties, or used for any purposes other than the performance of work for Nautilus, Inc. without written authorization. All rights are reserved, including copyrights.

METRIC_E_REV.E

WT-SYS-250-1

MATERIAL. - -

FINISH. - -

REVISIONS				
ZONE	REV.	DESCRIPTION	DATE	APPROVED
-	-	See Weight Tower BOM	-	-

- ALL BOLD RED NUMBERS ARE POWDER COATED

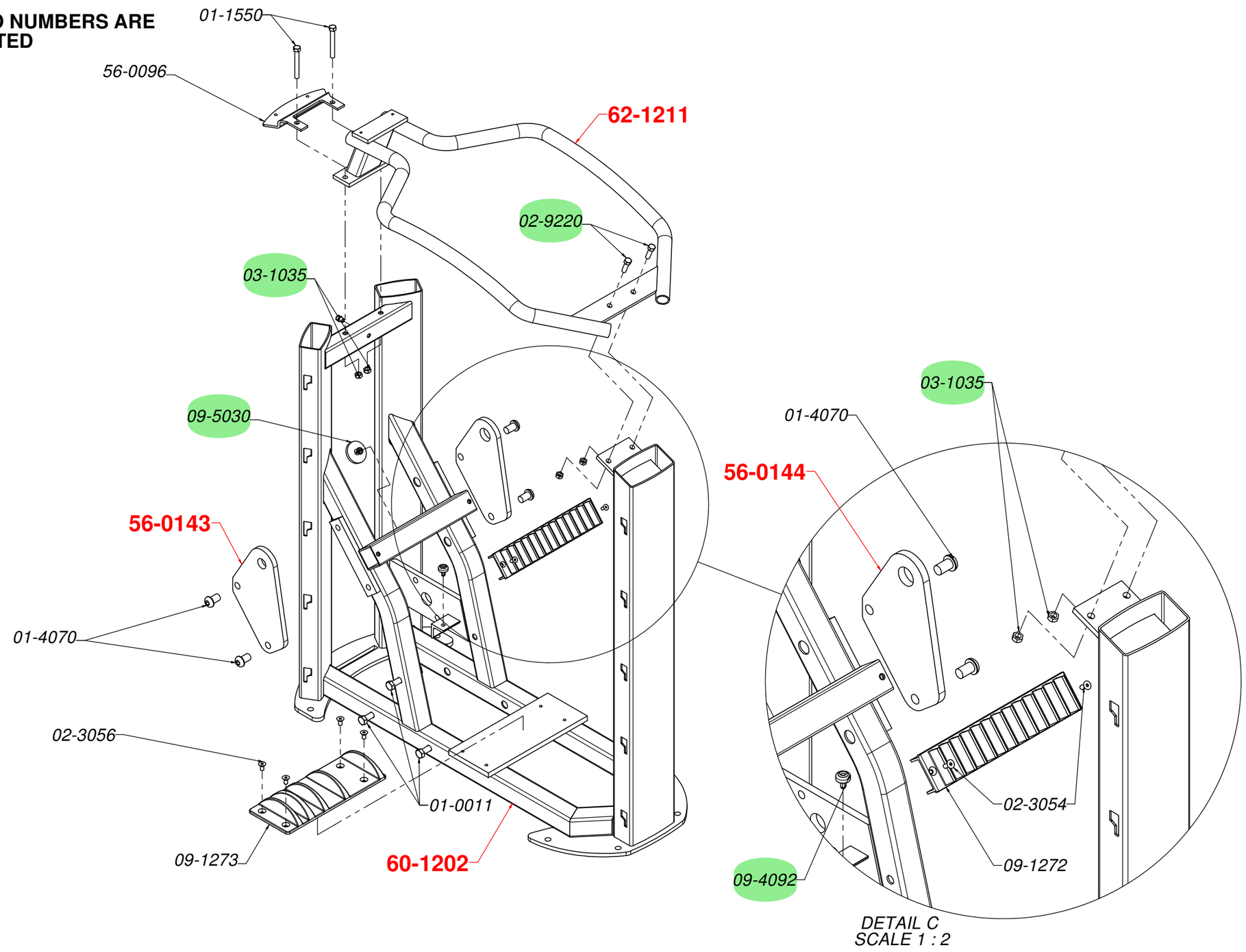

NAUTILUS, INC.
16400 SE NAUTILUS DRIVE, VANCOUVER, WA 98683

CONTACT. email / phone #

UNLESS OTHERWISE SPECIFIED:
1. ALL DIMENSIONS APPLY BEFORE PLATING OR COATING.
2. REMOVE ALL BURRS, BREAK SHARP EDGES .020 IN MAX.
3. ALL MACHINED SURFACES Ra 125 uin.
3. ALL APPLICABLE NAUTILUS STANDARDS AND SPECIFICATIONS APPLY.

INCH

THIRD ANGLE PROJECTION

TOLERANCES:		
	X.	± .125
	X.X	± .020
	X.XX	± .010
	X.XXX	± .005
	X/X	± 1/64
	ANGULAR	± 1°

(INTERPRET DIMENSIONS AND TOLERANCES PER ASME Y14.5M - 1994)

DO NOT SCALE DRAWING

DESIGNED	G.WEBB
DRAWN	G.Webb
DATE	09/07/07

TITLE. **Tower Weight Engine "ONE" 250-1**

SIZE **E** PART NO. **WT-SYS-250-1** REV. **D**

SCALE: 1:3 SHEET 4 OF 7

This document is the property of Nautilus, Inc. It may not be reproduced in whole or part, provided to third parties, or used for any purposes other than the performance of work for Nautilus, Inc. without written authorization. All rights are reserved, including copyrights.

INCH_E_REV-E

WT-SYS-250-1

MATERIAL. - -

FINISH. - -

REVISIONS				
ZONE	REV.	DESCRIPTION	DATE	APPROVED
-	-	See Weight Tower BOM	-	-

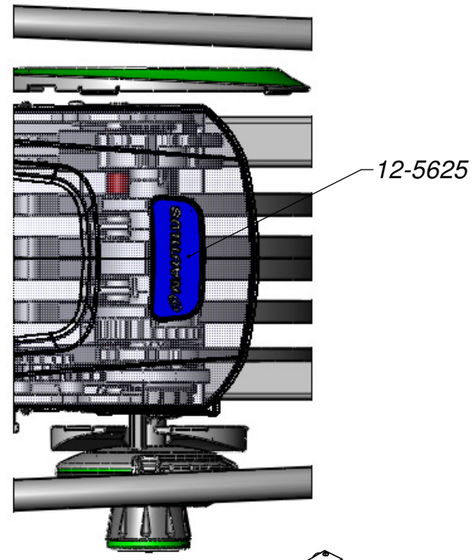

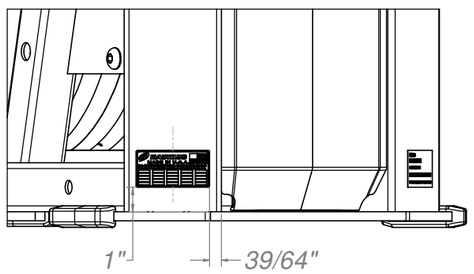

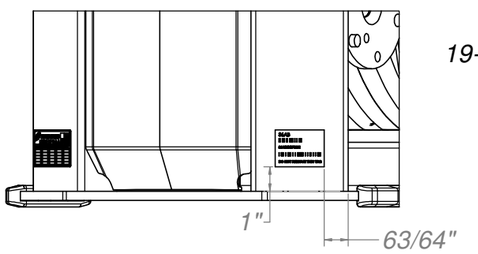

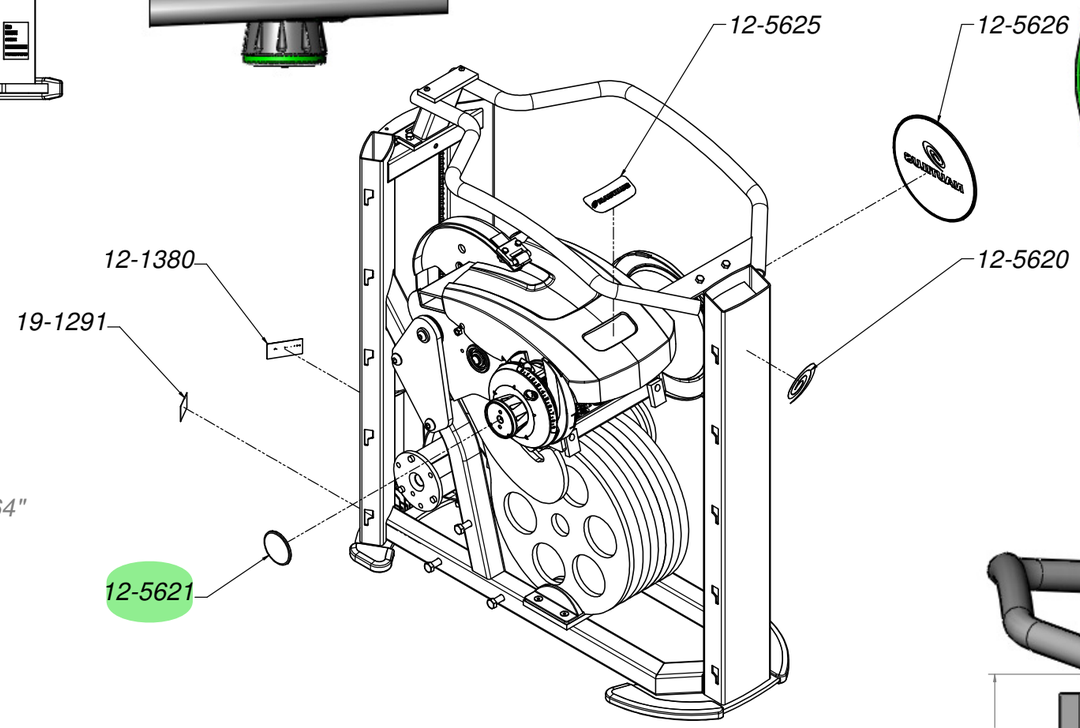

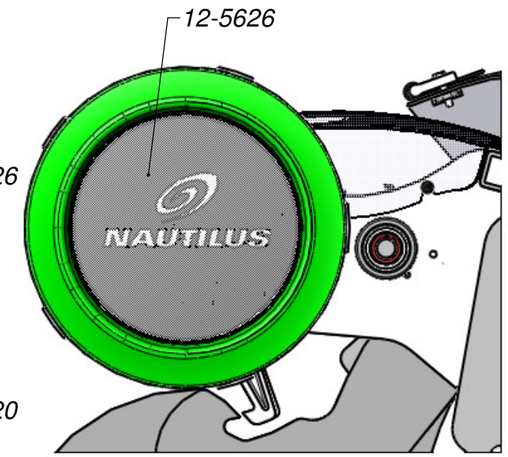

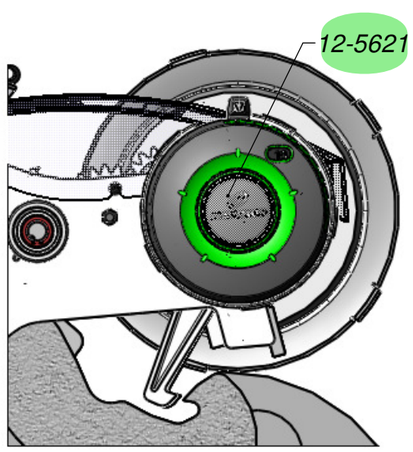

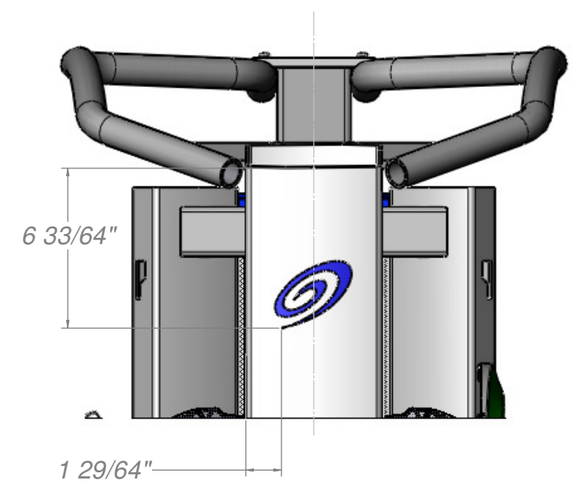

NAUTILUS, INC.
16400 SE NAUTILUS DRIVE, VANCOUVER, WA 98683
CONTACT email / phone #

UNLESS OTHERWISE SPECIFIED:
1. ALL DIMENSIONS APPLY BEFORE PLATING OR COATING.
2. REMOVE ALL BURRS, BREAK SHARP EDGES 0.5 MM MAX.
3. ALL MACHINED SURFACES Ra 3.2 µM.
4. ALL APPLICABLE NAUTILUS STANDARDS AND SPECIFICATIONS APPLY.

METRIC — THIRD ANGLE PROJECTION

TOLERANCES:
X. ± 3
X.X ± 0.5
X.XX ± 0.25
X.XXX ± 0.1
ANGULAR ± 1°
(INTERPRET DIMENSIONS AND TOLERANCES PER ASME Y14.5M - 1994)

DO NOT SCALE DRAWING

DESIGNED	G.WEBB
DRAWN	G.Webb
DATE	09/07/07

TITLE: Tower Weight Engine "ONE" 250-1

SIZE E | PART NO. WT-SYS-250-1 | REV. D

SCALE: 1:4 | SHEET 5 OF 7

This document is the property of Nautilus, Inc. It may not be reproduced in whole or part, provided to third parties, or used for any purposes other than the performance of work for Nautilus, Inc. without written authorization. All rights are reserved, including copyrights.

METRIC_E_REV.E

WT-SYS-250-1

MATERIAL. - -

FINISH. - -

REVISIONS				
ZONE	REV.	DESCRIPTION	DATE	APPROVED
-	-	See Weight Tower BOM	-	-

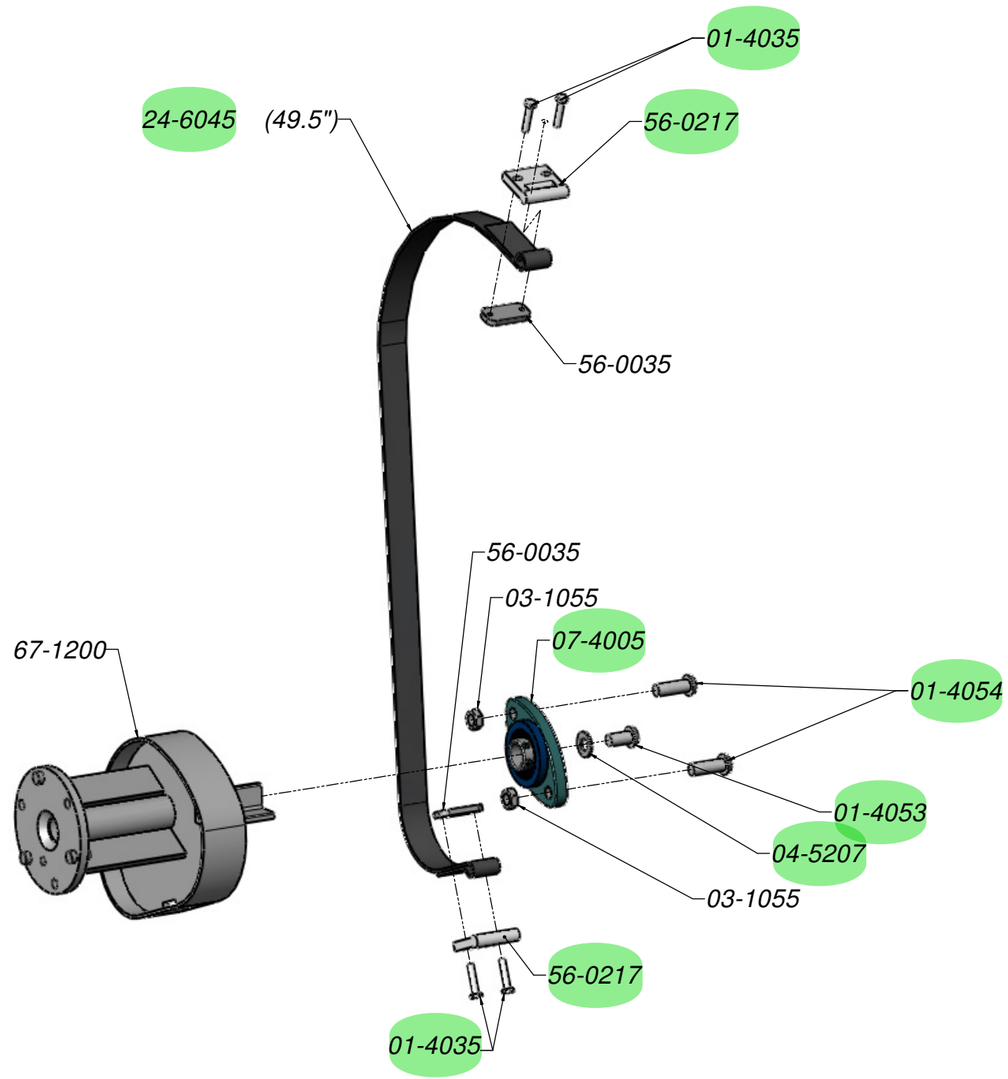

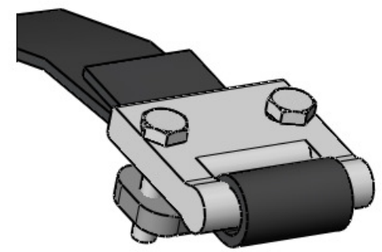

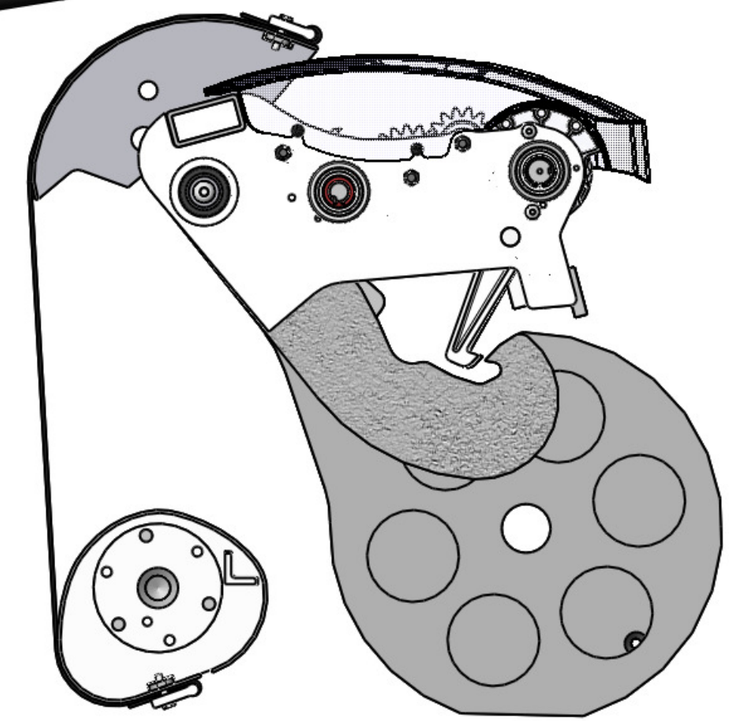

NAUTILUS, INC.
16400 SE NAUTILUS DRIVE, VANCOUVER, WA 98683
CONTACT email / phone #

UNLESS OTHERWISE SPECIFIED:
1. ALL DIMENSIONS APPLY BEFORE PLATING OR COATING.
2. REMOVE ALL BURRS AND SLIGHT SHARP EDGES 0.5 MM MAX.
3. ALL MACHINED SURFACES 3.2 uR.
3. ALL APPLICABLE NAUTILUS STANDARDS AND SPECIFICATIONS APPLY.

METRIC — THIRD ANGLE PROJECTION

TOLERANCES: X. ± 3; X.X ± 0.5; X.XX ± 0.25; X.XXX ± 0.1; ANGULAR ± 1°
(INTERPRET DIMENSIONS AND TOLERANCES PER ASME Y14.5M - 1994)

DESIGNED	G.WEBB
DRAWN	G.Webb
DATE	09/07/07

DO NOT SCALE DRAWING

TITLE: Tower Weight Engine "ONE" 250-1

SIZE E | PART NO. WT-SYS-250-1 | REV. D

SCALE: 1:2 | SHEET 6 OF 7

This document is the property of Nautilus, Inc. It may not be reproduced in whole or part, provided to third parties, or used for any purposes other than the performance of work for Nautilus, Inc. without written authorization. All rights are reserved, including copyrights.

METRIC_E_REV.E

WT-SYS-250-1

MATERIAL. - -

FINISH. - -

REVISIONS				
ZONE	REV.	DESCRIPTION	DATE	APPROVED
.	.	See Weight Tower BOM	.	.

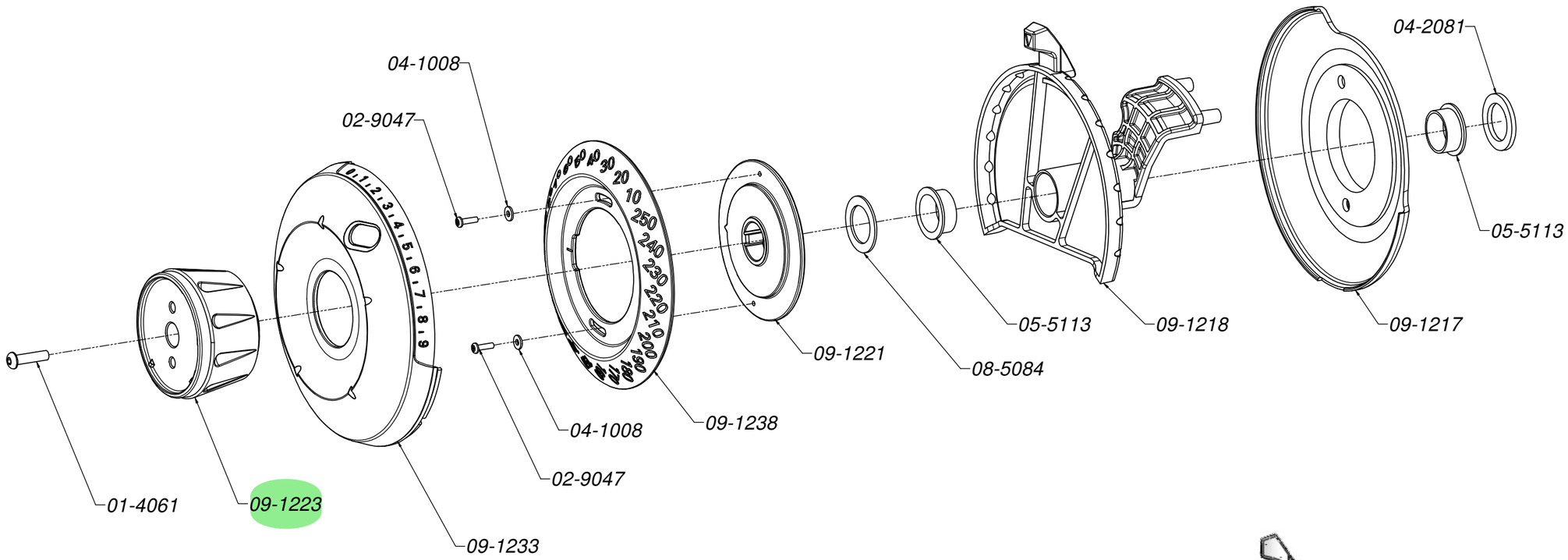

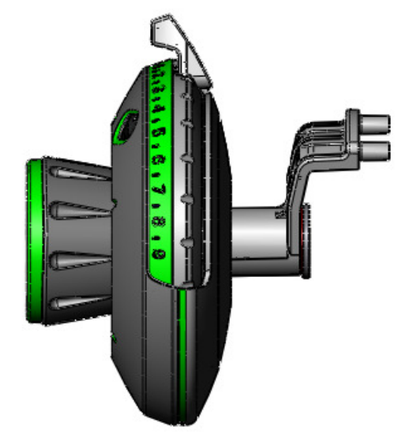

NAUTILUS, INC.
16400 SE NAUTILUS DRIVE, VANCOUVER, WA 98683
CONTACT email / phone #

UNLESS OTHERWISE SPECIFIED:
1. ALL DIMENSIONS APPLY BEFORE PLATING OR COATING.
2. REMOVE ALL BURRS, BREAK SHARP EDGES 0.5 MM MAX.
3. ALL MACHINED SURFACES Ra 3.2 uM.
4. ALL APPLICABLE NAUTILUS STANDARDS AND SPECIFICATIONS APPLY.

METRIC THIRD ANGLE PROJECTION

TOLERANCES:
X. ± 3
X.X ± 0.5
X.XX ± 0.25
X.XXX ± 0.1
ANGULAR ± 1°
(INTERPRET DIMENSIONS AND TOLERANCES PER ASME Y14.5M - 1994)

DESIGNED	G.WEBB
DRAWN	G.Webb
DATE	09/07/07

DO NOT SCALE DRAWING

TITLE **Tower Weight Engine "ONE" 250-1**

SIZE **E** PART NO. **WT-SYS-250-1** REV. **D**

SCALE: 1:1 SHEET 7 OF 7

This document is the property of Nautilus, Inc. It may not be reproduced in whole or part, provided to third parties, or used for any purposes other than the performance of work for Nautilus, Inc. without written authorization. All rights are reserved, including copyrights.

METRIC_E_REV.E